Micro

Case Study: GETTING DISHES CLEANER WITH THE NATION'S LEADING APPLIANCE MANUFACTUER

mic-tec.com

Introduction

For a new generation of their elite model dishwasher, the nation's leading home appliance manufacturer wanted something special and difference making. For them that looked like including a feature that would help get dishes cleaner than any other competitor and propel them ahead of the competition. In achieving this, it was vital that the new dishwasher would also reduce water and power use so that it might earn the industry's highest Energy Star rating.

Michael Tucci,
CEO and President

The Problem

The problem with dishwasher efficiency is how do to know who has just loaded the dishes? Is it Mom, who rinses everything before placing it in the rack? Or is it Dad, who does not prewash, and whose load includes a dish with half-filled lasagna scraps? Knowing how dirty a particular load of dishes might be, is the only way to understand how long a cycle should run. If it's too short, the load will not effectively clean. But if it's too long, the dishwasher will be wasting both water and power.

The client called Micro to help design a way to sense the amount of food solids in a specific load by sensing the pressure of the wash water flow. Our early tests saw us simply attach one of our small, rugged 500 series switches to a tube on the water flow. It worked, but there was much more to be done to render a robust product for cost-effective production and long life in the field.

> “it was vital that the new dishwasher would also reduce water and power use so that it might earn the industry's highest Energy Star rating.

Micro in Action

To overcome this challenge, Micro applied a custom diaphragm to resist unique dishwasher contaminants (Among other things, our research found that beef fat contains stearic acid which attacks most elastomers). To save labor, Micro then designed an installation module. The line worker could remove it from the box, attach it to the water pump on one end, clamp a circulating hose on the other end, and plug into the wire harness.

To save on materials, Micro worked with the client directly to mold the value-added module from the same polypropylene used by the train car load (and at advantaged cost) in the dishwasher tub and door lining.

Micro even solved an assembly problem which did not surface until after the start of high volume production. On the pump end of the module, a large O-ring prevented leaks and was a very important feature. We were repeatedly told that RULE #1 was: DO NOT LEAVE OUR CUSTOMER STANDING IN A PUDDLE, which made sense. Rather than counting on the line worker to install the O-ring ahead of the module, the customer asked Micro for a way to pre-load it. Our solution was a molded keeper, which the line worker could open to expose the O-ring, breaking off the keeper and installing the module with their mounting screw.

The Outcome

The final result was easy to manufacture, quick to install, low in cost, and highly reliable in the field. The part achieved all the original design goals, and earned their elite model the top Energy Star rating they were after. Soon, the appliance maker's #1 private label department store brand wanted the feature on all their labels as well which we assisted with. and then, not long after, the feature was added to the customer's entire dishwasher lineup. At peak run, Micro was supplying over 35,000 units per week.

> “At peak run, Micro was supplying over 35,000 units per week.

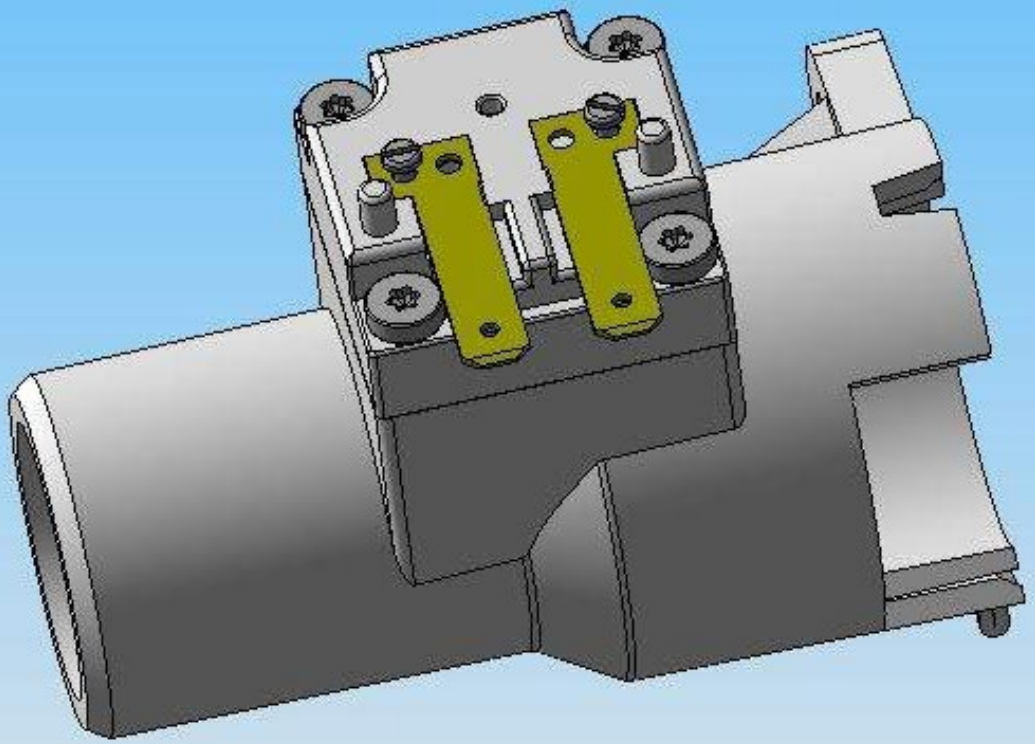

Contact us today

Every innovated solution is backed by the uncompromising pursuit of excellence at every phase of our manufacturing process.

Call us Toll-Free: (888) 386-4270
Phone: (954) 973-6166
Fax: (954) 973-6339
Email: info@mic-tec.com

Follow us online